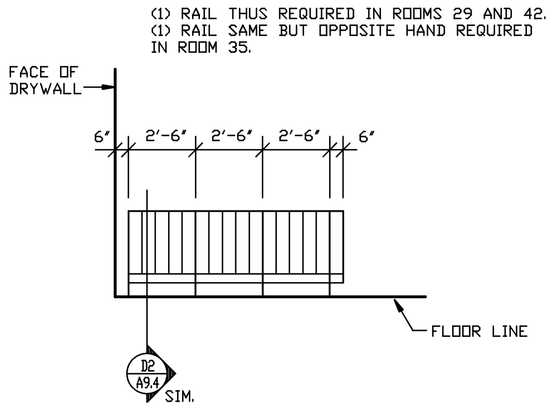

A1 A9.4 JURY BOX RAIL ELEV. (SIDE)

1/4" = 1'-0"

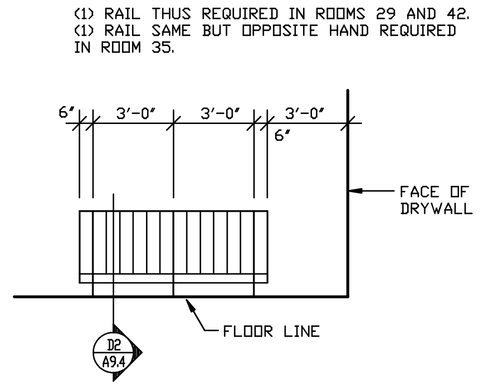

A2 A9.4 JURY BOX RAIL ELEV. (FRONT)

1/4" = 1'-0"

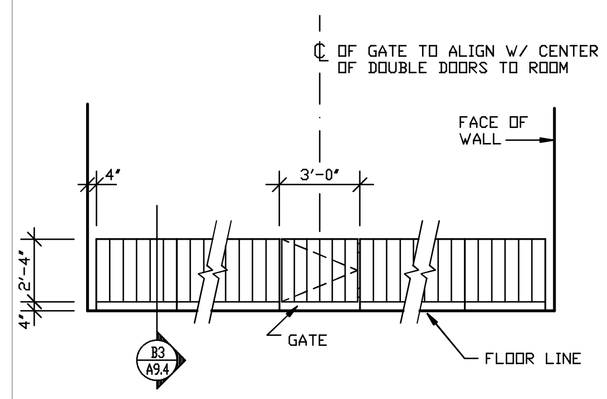

A3 A9.4 COURTROOM RAIL ELEVATION

1/4" = 1'-0"

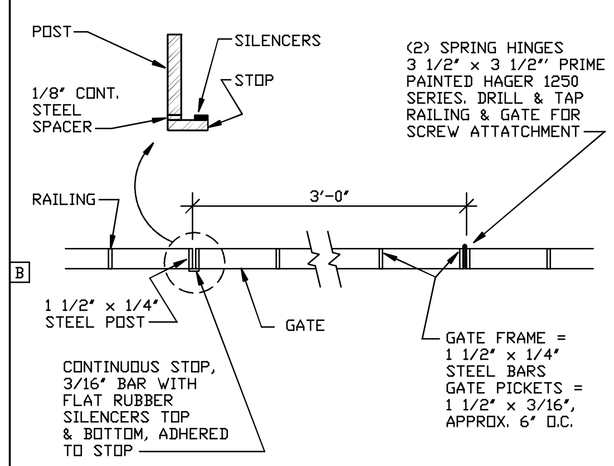

B1 A9.4 COURTROOM RAIL GATE DETAIL

1 1/2" = 1'-0"

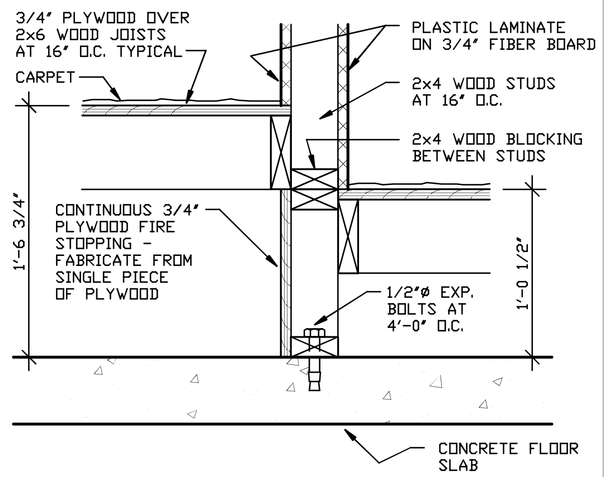

B2 A9.4 FIRESTOPPING DETAIL

1 1/2" = 1'-0"

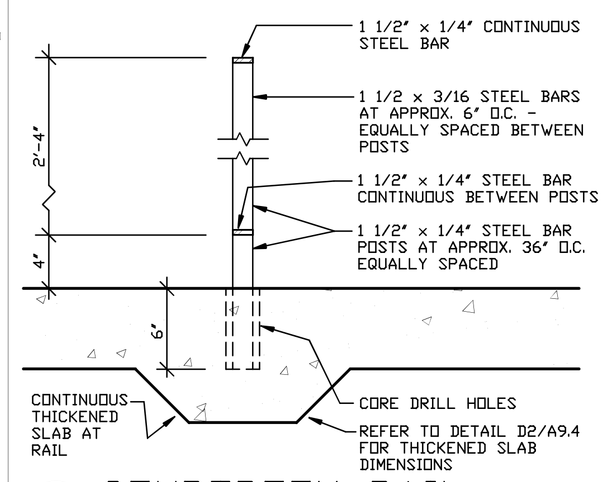

B3 A9.4 COURTROOM RAIL

(ALL WELDED STEEL CONSTRUCTION)

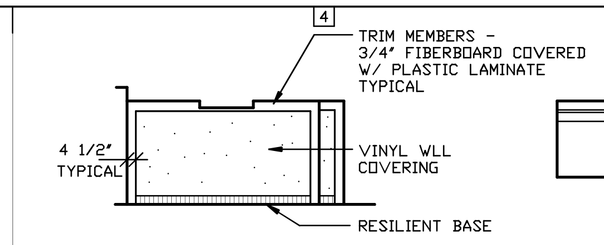

A COURT RECORDER'S DESK (FRONT)

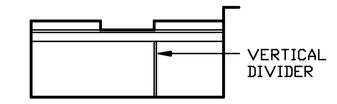

B COURT RECORDER'S DESK (REAR)

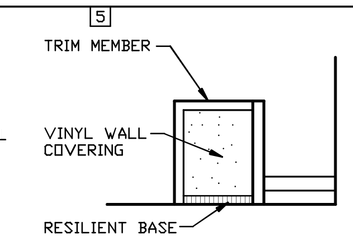

C COURT RECORDER'S DESK (SIDE)

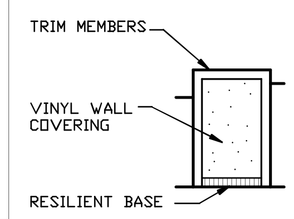

D JUDGE'S BENCH (FRONT)

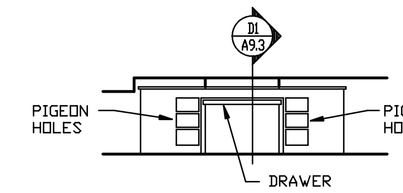

E JUDGE'S BENCH (REAR)

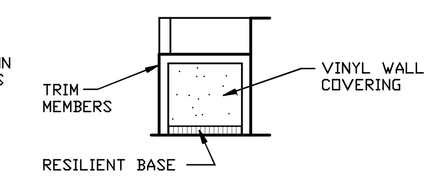

F WITNESS STAND

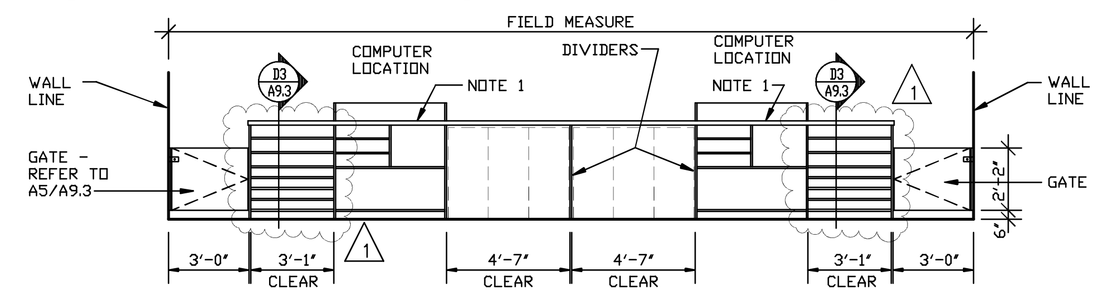

G COUNTER AT ROOM #62 (REAR)

ARCHITECTURAL WOODWORK ELEVATIONS

1/4" = 1'-0"

ELEVATION NOTES

NOTE 1 AT (2) COMPUTER LOCATIONS IN THE COUNTER SURFACE, PROVIDE SLOTTED OPENING FOR PRINTER PAPER. OPENINGS SHALL BE 21-INCHES LONG x 3-INCHES WIDE. TRIM-OUT OPENINGS WITH PLASTIC LAMINATE. EXACT LOCATIONS SHALL BE DETERMINED BY OWNER.

REVISION 1 OCT. 23, 1991

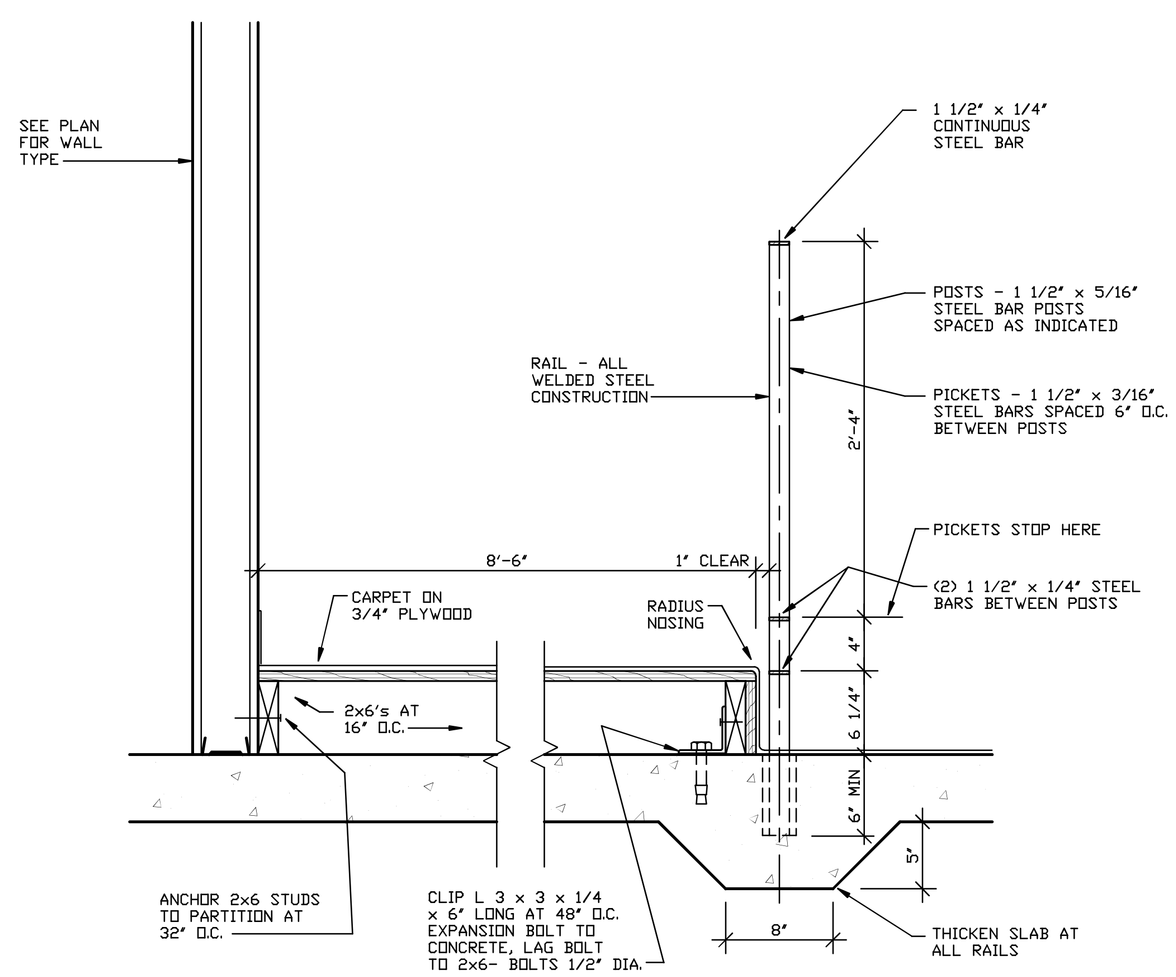

D2 A9.4 SECTION THRU JURY BOX

1 1/2" = 1'-0"

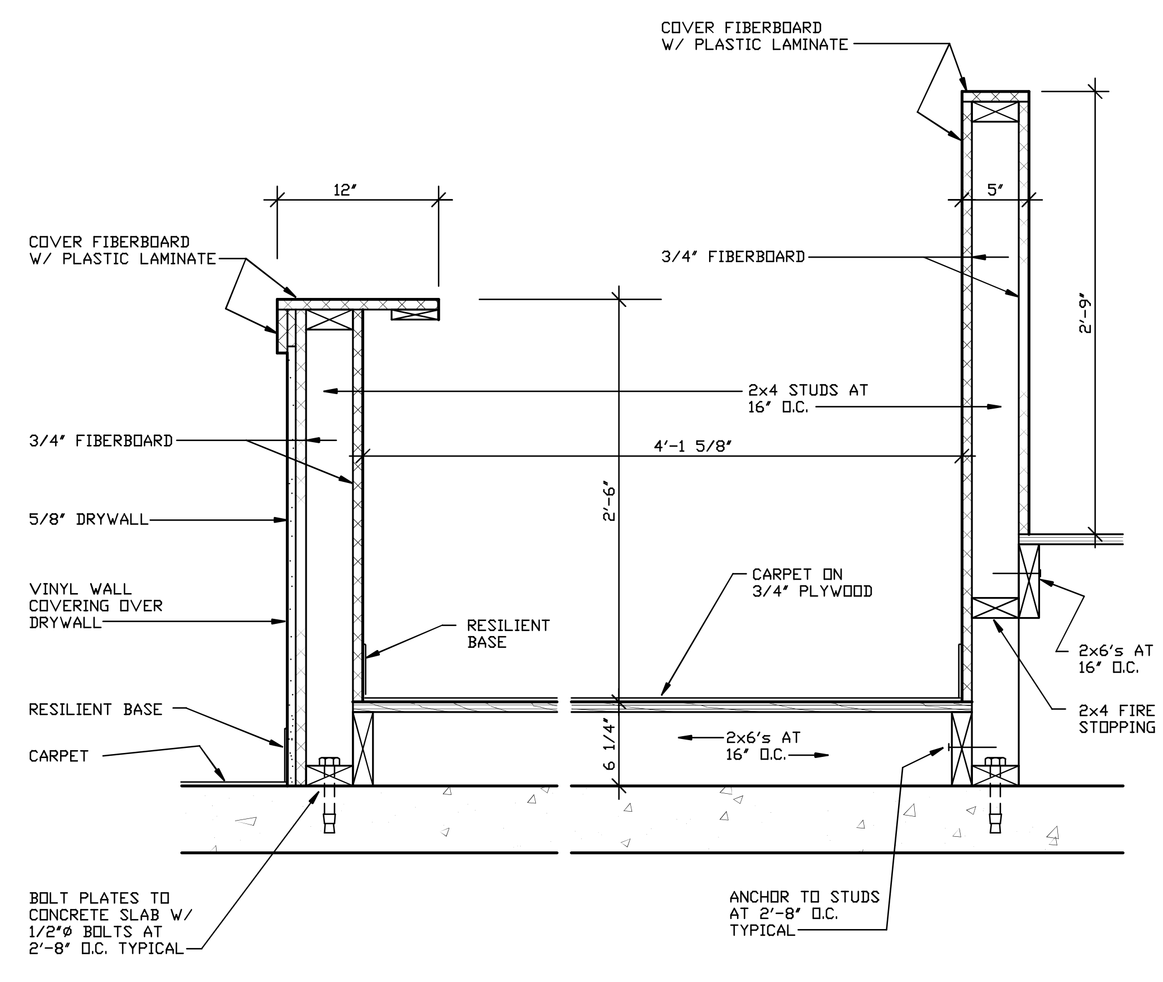

D4 A9.4 SECTION THRU WITNESS STAND

1 1/2" = 1'-0"