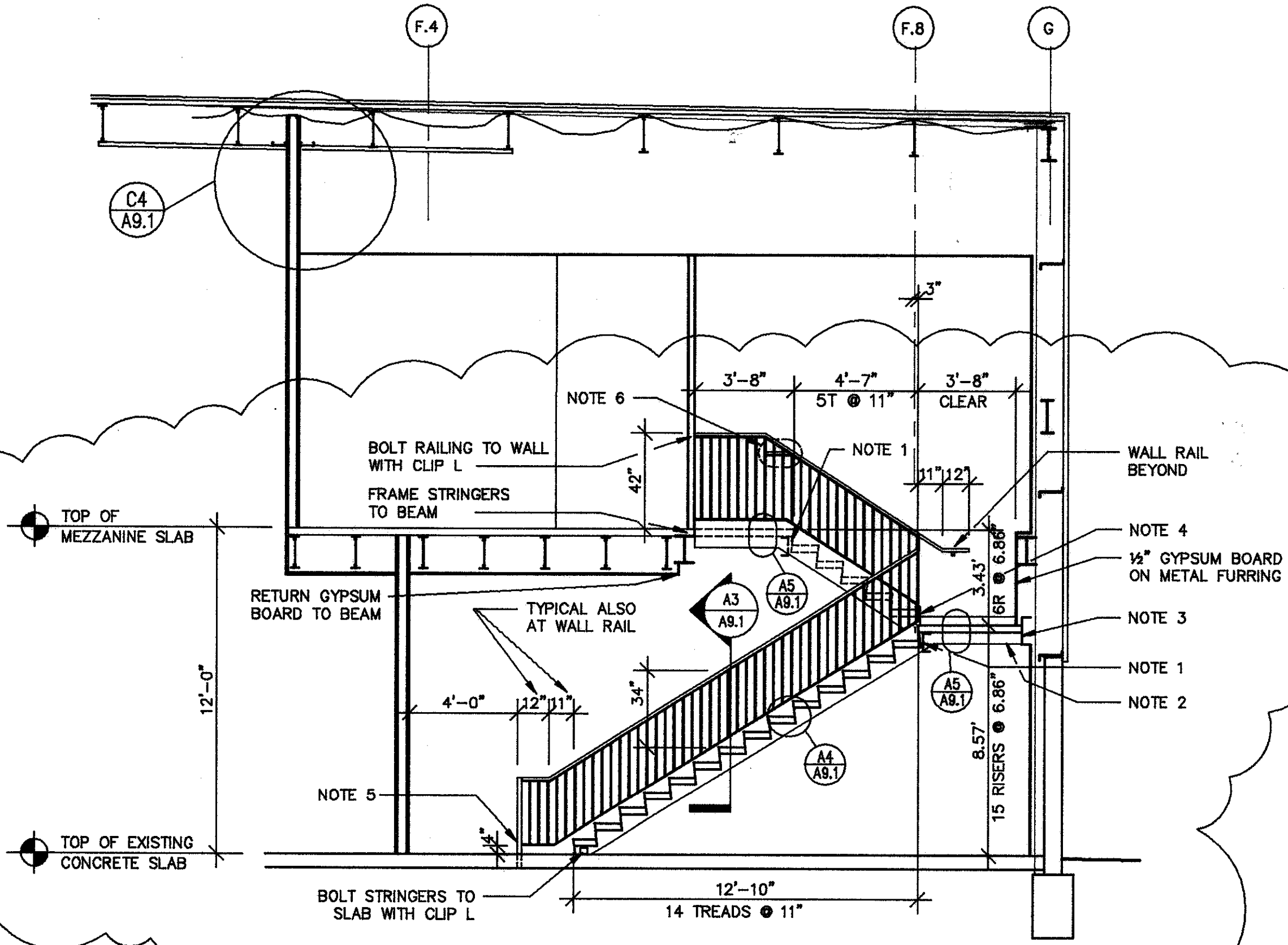

NOTE: HANDRAIL REQUIRED ON BOTH SIDES OF STAIR.

NOTE: DIMENSIONS ARE TO RISER LINES, NOT NOSINGS.

PROVIDE MINIMUM CLEAR WIDTH OF 48" BETWEEN HAND RAILS.

A/A3.5 STAIR SECTION

¼" = 1' -0"

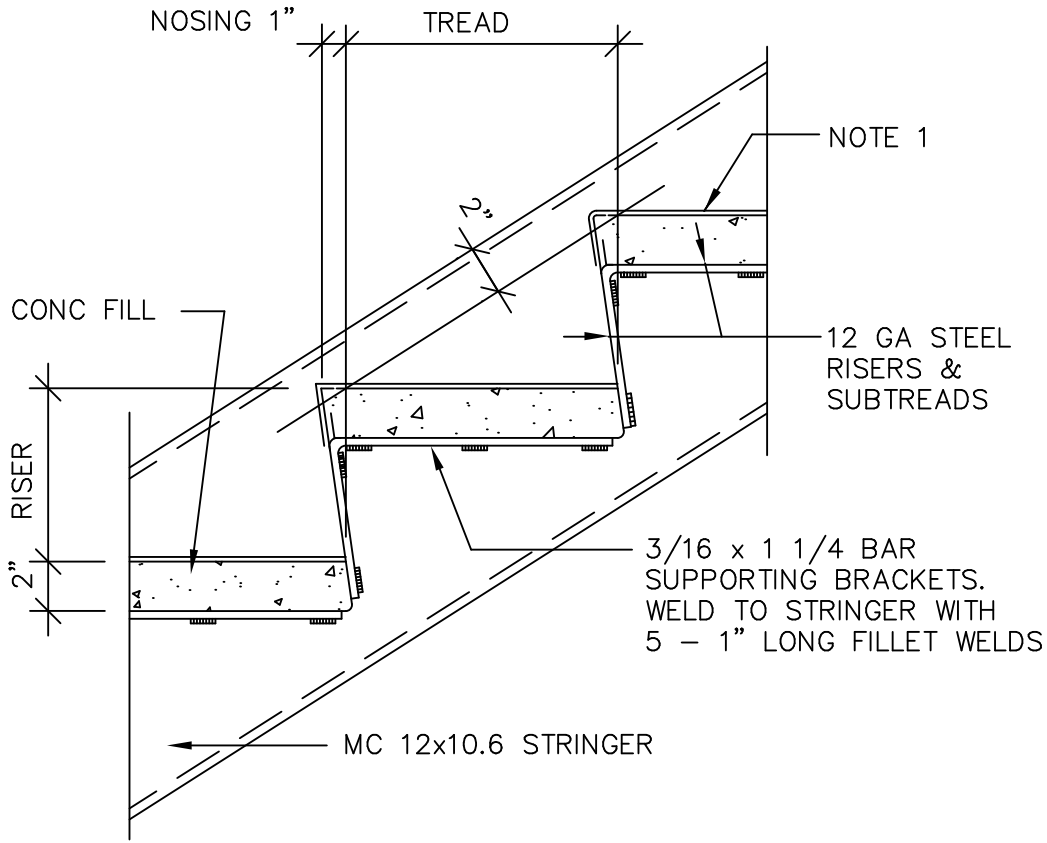

A4 / A9.1

STAIR DETAIL

1Ð" = 1'–0"

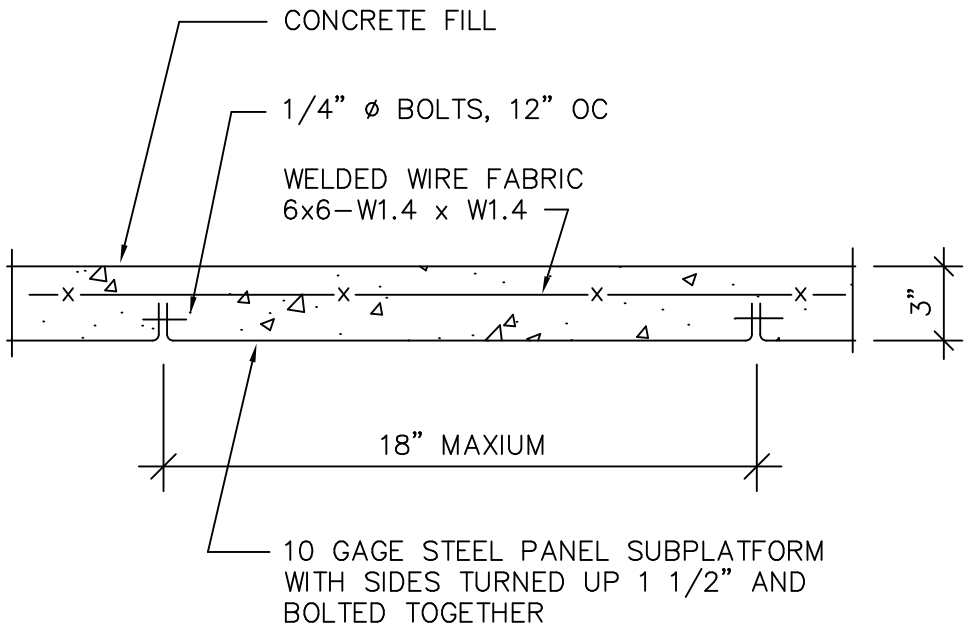

A5 / A9.1

PLATFORM CONSTRUCTION

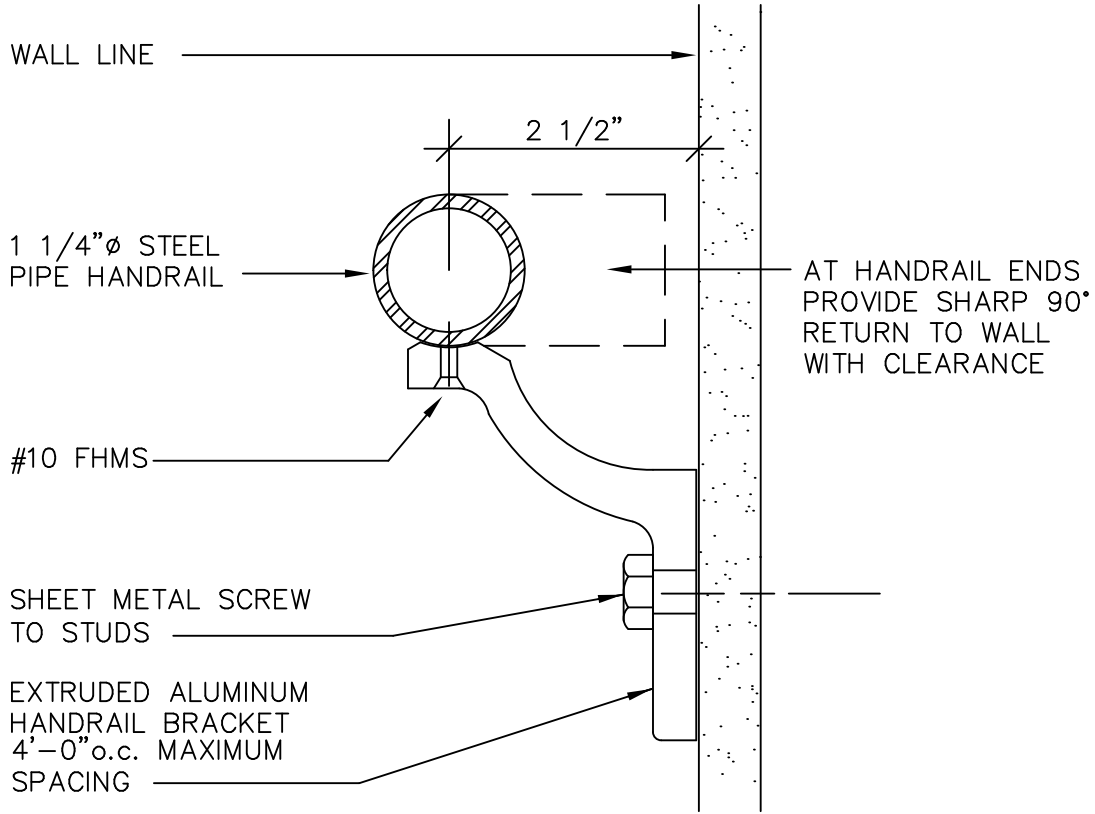

A2 / A9.1 WALL HANDRAIL @ STAIR

6" = 1'-0"

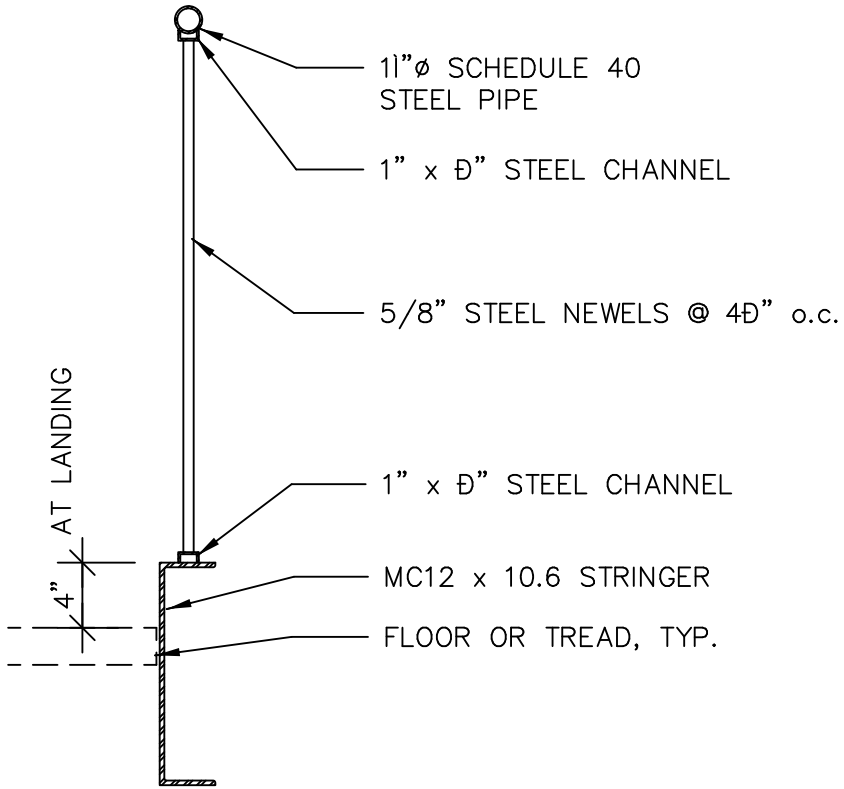

A3 / A9.1 RAILING DETAIL

1" = 1'-0"